TYPE 3 LATCH S1500-3-750 AND TYPE 3 RECEIVER R500-3-750

FOR EXHIBITS, STORE FIXTURES, OFFICE PANELS, PREFAB STRUCTURES, ETC.

Shown here in Figs. 1, 2, & 3, as mounted in '2x3' framing. (1.500"/38.1mm x 2.500"/63.5mm), this Latch/Receiver combination is also frequently used in thinner framing (See Figs. 4A & 4B)

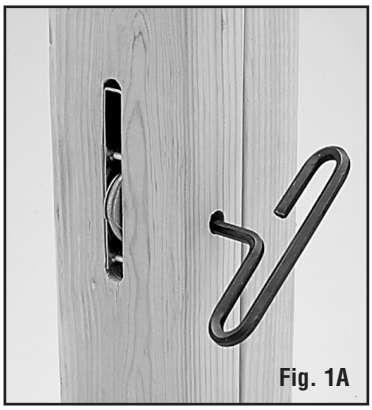
Fig. 1A

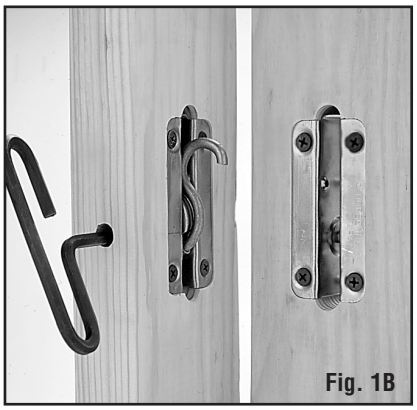
Fig. 1B

APPLICATIONS

This Flange-to-Flange mounting of the Type 3 Latch S1500-3-750 and the Receiver R500-3-750 in two '2x3's is typical of heavier framing applications.

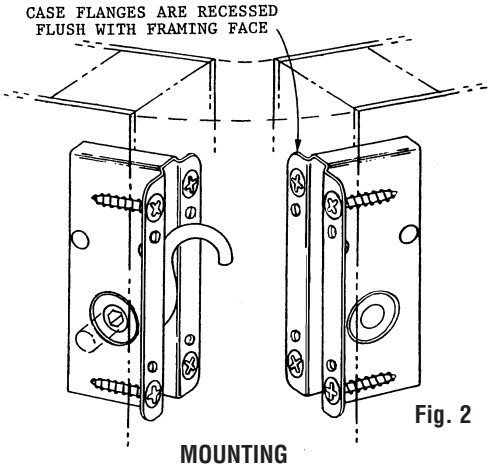

Fig. 2

MOUNTING

Type 3 Latch: **S1500-3-750**
Type 3 Receiver: **R500-3-750**

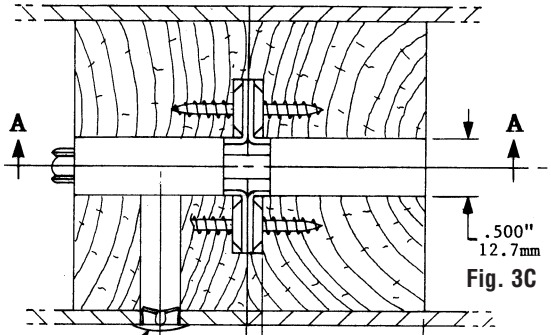

Fig. 3C

• See TDS 106 thru 125 for Latch/Receiver combinations in thin framing. TDS 108 is most frequently used.

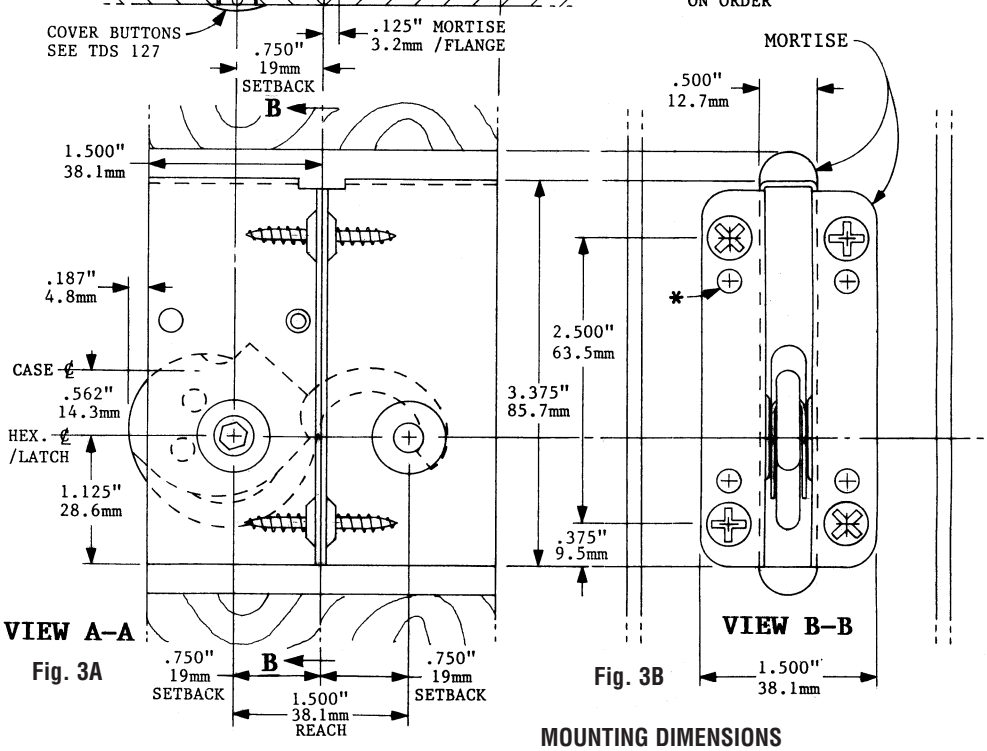

Fig. 3A

Fig. 3B

MOUNTING DIMENSIONS

Type 3 Latch: **S1500-3-750**
Type 3 Receiver: **R500-3-750**

Fig. 4B

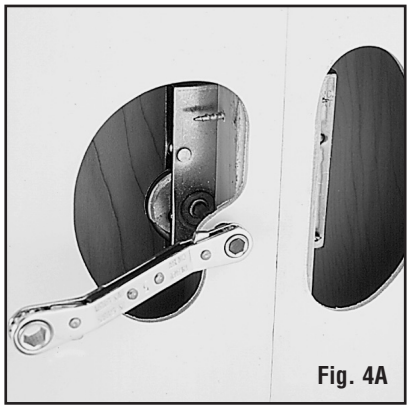
Fig. 4A

The two illustrations above show a Type 3 Latch/Receiver combination used in thinner framing (See TDS 108-1)

 © 2009