S1125-SXL-562 LATCH AND A JR250 RECEIVER

The Stainless Steel, Hand-Operated SXL Latch is Surface Mounted. Shown Here With A JR250 Receiver, The SXL Latch Can Also Be Used With Many Other Receivers (See TDS 126).

Fig. 1 A SXL Latch and a 'J' Receiver are used here to hold down a box lid.

This is a Left-Hand-Operating Latch.

– IDEAL FOR –

Metal/Wooden Boxes, Sliding Panels and Doors, Windows, Cabinets, Machine Safety Shields, Enclosures, Exhibits, Museum Displays and Stage Settings, Modular Equipment, Sectional Tables, Store Fixtures, and Many More Applications

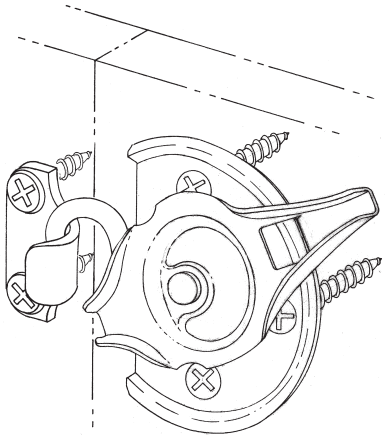

MOUNTING

Fig. 2 The SXL Latch and 'J' Receiver combination as used for panel joining, windows, doors, etc.

Easy to Install and Operate • Trouble Free • No Parts 'Hanging Out' Holds Parts Together With a Powerful, Spring-Loaded Force.

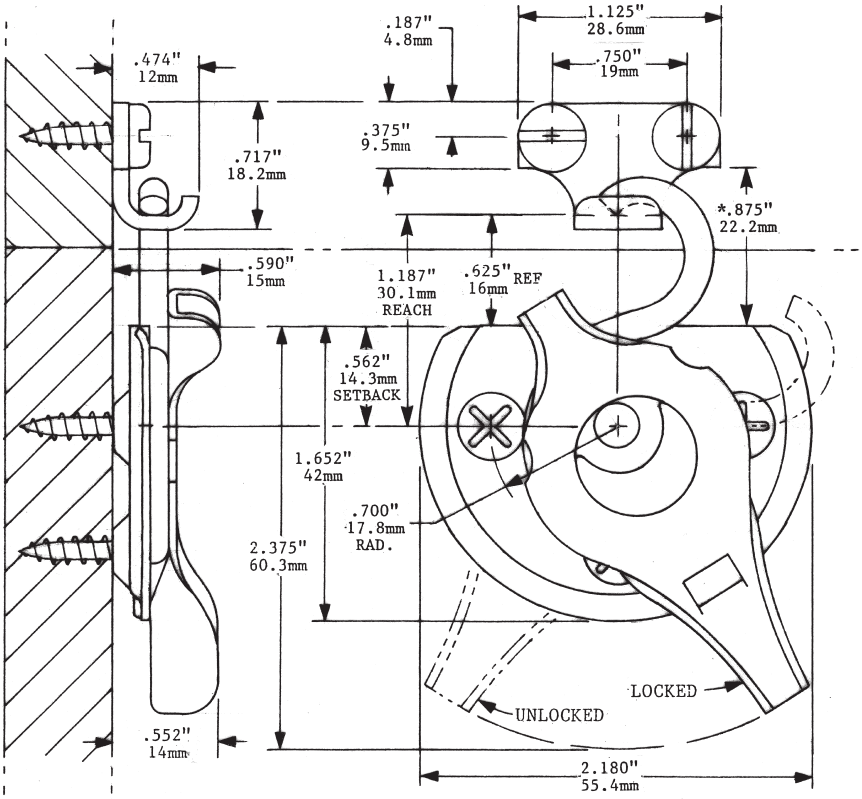

Additional SX Latch/Receiver Combinations Are Shown in TDS 167 Series Illustrations

Fig. 3B

Fig. 3A

MOUNTING DIMENSIONS
Latch: **S1125-SXL-562**
Receiver: **JR250**

* This mounting dimension (.875"/22.2mm), is for optimum clamping force (200#/90.7kg). For less clamping force, reduce this dimension.