NOTES:

1. ALL DIMENSIONS ARE IN INCHES. DIMENSIONS SHOWN IN BRACKETS ARE IN MM FOR REFERENCE ONLY.

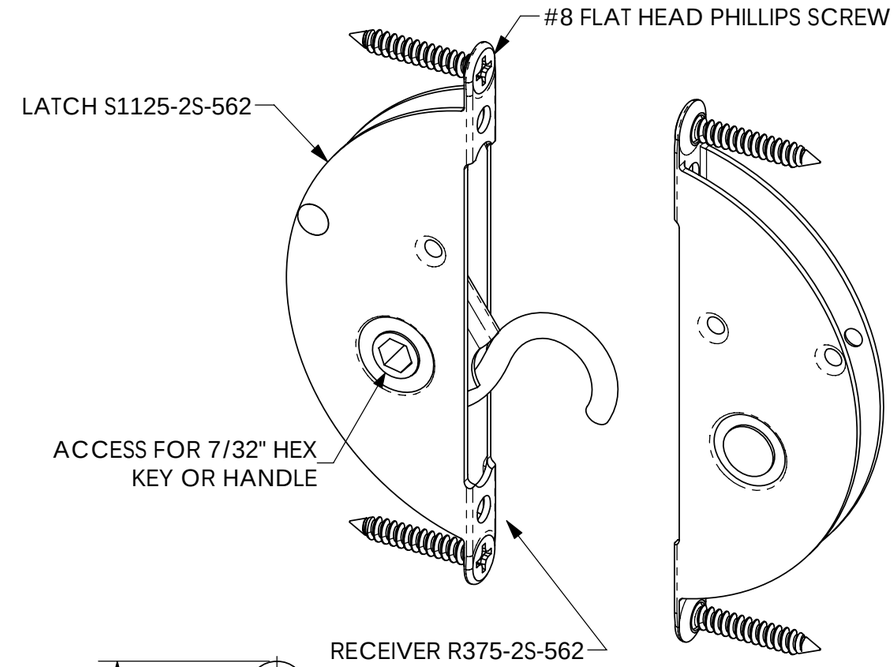


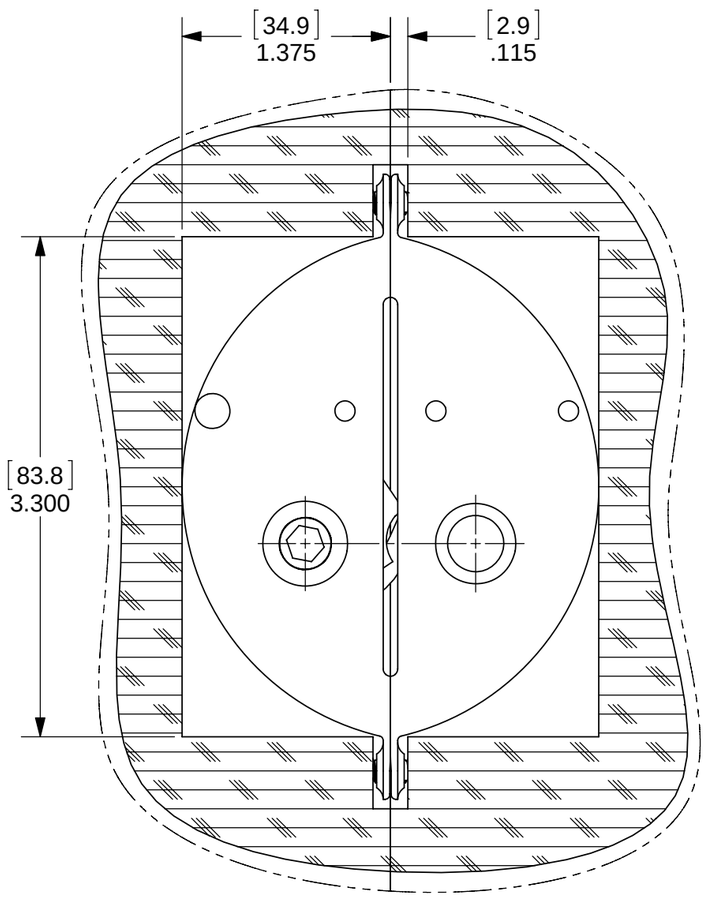


**SECTION THRU DOOR**

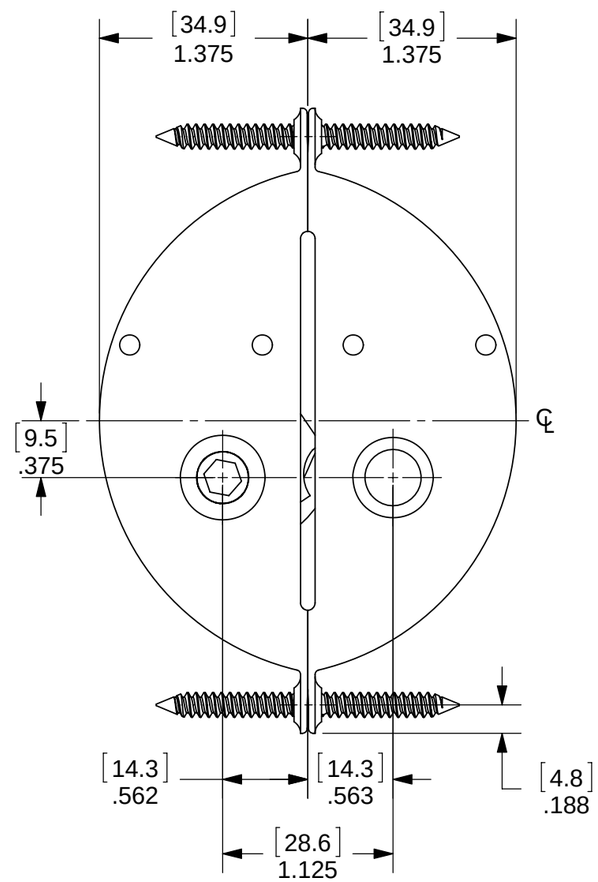


DIMENSIONS WHEN MOUNTED AND LOCKED
LATCH AND RECEIVER CASES TOUCH WHEN LOCKED

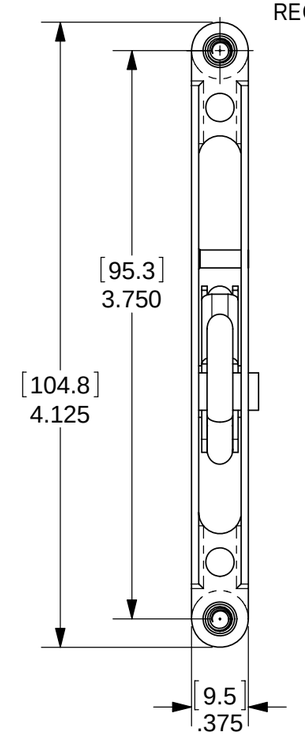


| | | | |
|---|---|---|---|
| TYPE 2S - SMALL LATCH & RECEIVER | | | |
| No. TDS 62-1 | | | Size |
| Scale 1:1 | 02-26-2014 | Sheet 1 of 1 | B |